RIPE – European IP Inventory

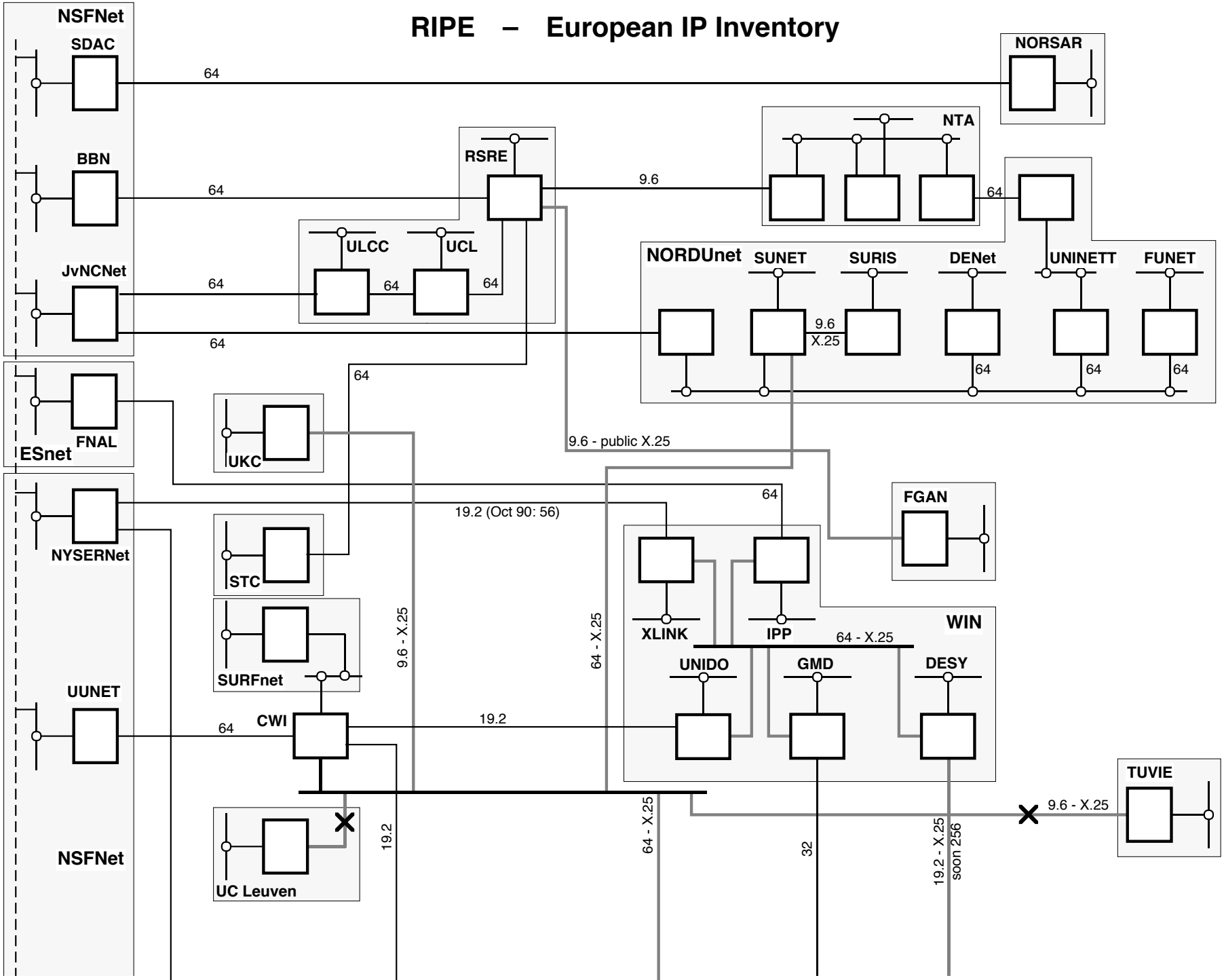

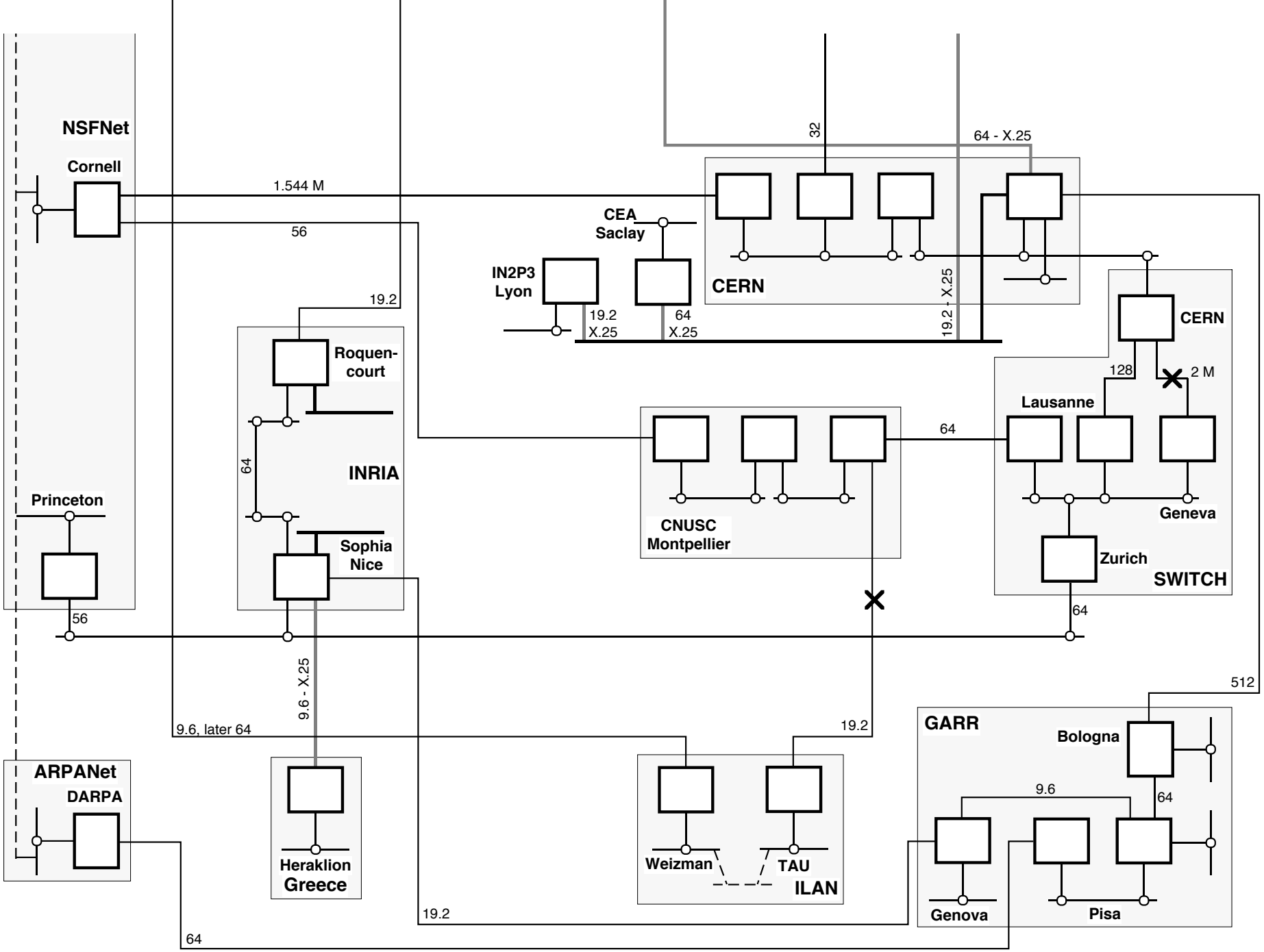

For sure you will find something we missed to include into this map.
Please send corrections and additions to the given address.

The PostScript™ version of this map can be fetched by anonymous ftp from
nic.eu.net [192.16.202.1] in the directory ~ftp/ripe/maps

August 28, 1990 © SWITCH/tl
<lenggenhager@verw.switch.ch>