European IP Connectivity

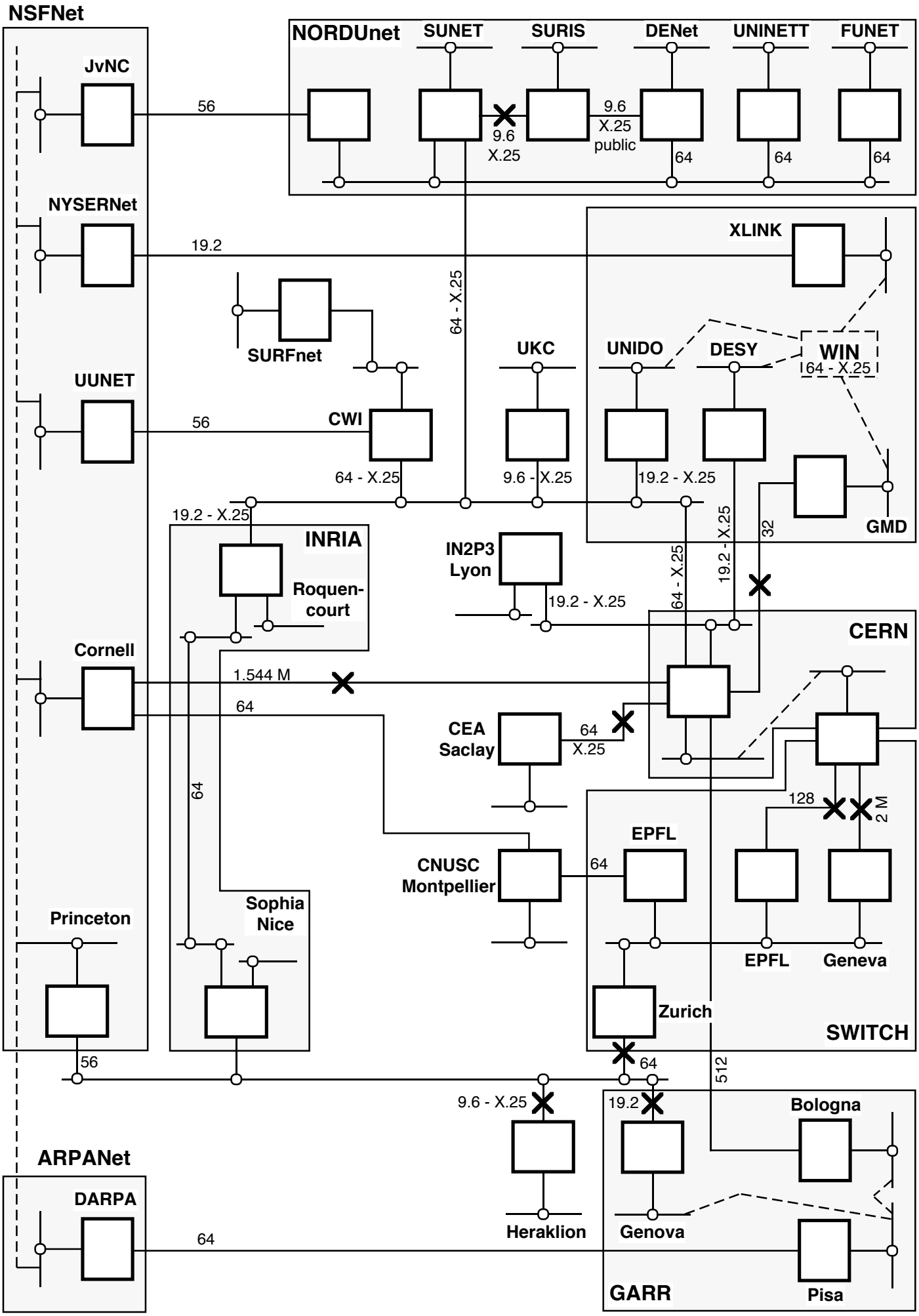

31 January 1990 © SWITCH/tl